MEMBER	No OF	BARS PER MEMB	DIA	LENGTH	TOTAL NUM-BER	MARK	S C	BENDING A	B	C	D	E/r
Upstand Beam 1	1	4	Y20	1700	4	A	34	1570				
		2	Y20	12750	2	B	55	11950				
		5	Y16	12200	5	C	55	11950				
		5	Y16	12200	5	D	55	11950				
		5	Y16	12200	5	E	55	11950				
		5	Y20	12550	5	F	55	11950				
		7	Y20	11700	7	G	55	11400				
		4	Y20	1700	4	H	34	1570				
		31	Y10	2450	31	SA	60	940	220			

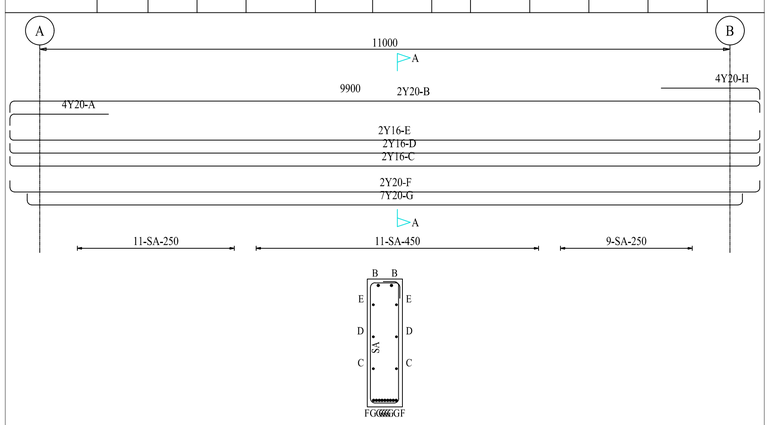

SECTION A-A

	8	10	12	16	20	25	32	40	TOT		
R										Date	2017/11/27
Y		47		116	356				519	Det by	Koketso Moyaba
TOT		47		116	356				519	Ref Dwg	PHG-STR-105
										Job No	BioPark Phase 1C

MEMBER	No OF	BARS PER MEMB	DIA	LENGTH	TOTAL NUM-BER	MARK	S C	BENDING A	B	C	D	E/r
Upstand Beam 2	1	4	Y20	1700	4	A	34	1570				
		2	Y20	11050	2	B	34	10920				
		5	Y16	12600	5	C	34	12470				
		5	Y16	12600	5	D	34	12470				
		5	Y16	12600	5	E	34	12470				
		5	Y20	12850	5	F	34	12720				
		7	Y20	12550	7	G	34	12400				
		2	Y20	5400	2	H	20	(5400)				
		7	Y20	4200	7	I	20	(42000)				
		7	Y20	12650	7	J	34	12500				
		2	Y20	12850	2	K	34	12720				
		5	Y16	12600	5	L	34	12470				
		5	Y16	12600	5	M	34	12470				
		5	Y16	12600	5	N	34	12470				
		2	Y20	11050	2	O	34	10920				
		4	Y20	1700	4	P	34	1570				
		78	Y10	2450	78	SA	60	940	220			

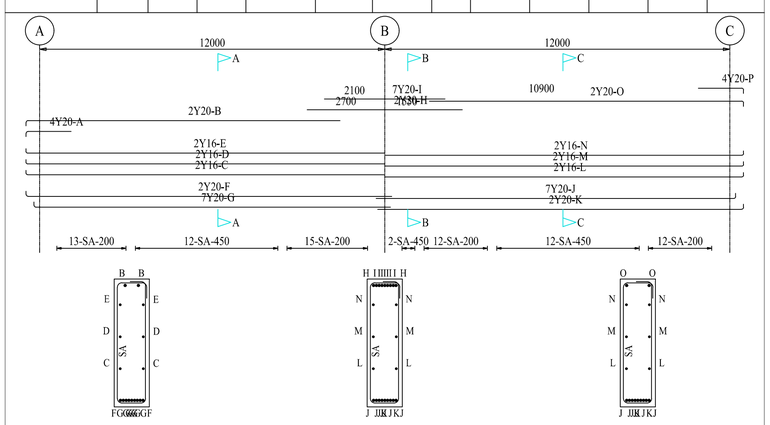

SECTION A-A SECTION B-B SECTION C-C

	8	10	12	16	20	25	32	40	TOT		
R										Date	2017/11/27
Y		118		239	803				1160	Det by	Koketso Moyaba
TOT		118		239	803				1160	Ref Dwg	PHG-STR-105
										Job No	BioPark Phase 1C

GENERAL NOTES

- FIGURED DIMENSIONS ONLY TO BE USED.
- COORDINATES BASED ON WGS84
- LEVELS BASED ON MSL DATUM
- DISCREPANCIES, ERRORS AND OMISSIONS ARE TO BE REPORTED TO ENGINEER IMMEDIATELY THEY BECOME EVIDENT.
- SHOP DRAWINGS TO BE SUBMITTED FOR APPROVAL PRIOR TO MANUFACTURE OR INSTALLATION.
- COPYRIGHT AND RIGHT OF REPRODUCTION OF THIS DRAWINGS OR ANY PORTION THEREOF IS RESERVED.

Legend

Roof Line	
Section cut	
Proposed Walls	
Concrete Work	
Fittings on Proposed uPVC Water Pipeline (Class 16)	
Fittings on Proposed Sewer Line	MH
Overland Stormwater Drainage	

NOTES

1. Excavations for foundations and all reinforcing must be approved by the engineer before any concrete is cast.
2. All bases are symmetrical about the center lines unless otherwise shown.
3. Specifications:

Reinforced concrete work	SABS 1200g
Structural steel work	SABS 1200h
Paintwork on steel	SABS 1200h

4. Concrete work: all brickwork are load bearing and must be completed before commencing with the construction of the concrete slab
5. Minimum concrete cover:

Bases	75mm
Columns	40mm
Beams	25mm
Slabs	12mm or dia

6. Concrete: all ready mixed concrete will only be approved if a mix design and cement grading by SABS is submitted to the engineer.
7. Test cubes minimum must be tested by an independent soil laboratory.
8. All imported cement approved by the SABS must be approved by the engineer on the basis of:
   All cement must be bought in one batch and treated to SABS 120g.
   A mix design must be submitted.
   4 sets of 3 test cubes must be submitted with age of testing as follows:

	3 cubes @ 7 days
	3 cubes @ 14 days
	3 cubes @ 21 days
	3 cubes @ 28 days

9. Concrete cube strength at 28 days:

Blinding	15 MPa
Reinforced Foundations	30 MPa
Columns	40 MPa
Beams	30 MPa
Slabs and Staircases	30 MPa

Rev	Date	Issued for	Approved
		Preliminary	
		Information	
00	26/11/2017	Tender Contract	
		Measurement	
		Construction	
		Approval	

Client: THE INNOVATION HUB — Innovation Catalyst for Gauteng City Region — A subsidiary of the Gauteng Growth and Development Agency; BIO PARK; GDED; GGDA

Discipline	Signature	Pr Number	Date
Architecture			
Civil/Structural			

Phunga Consulting Engineers — Quality Driven Solutions
Route 21 Corporate Park, Block D,
63 Regency Drive Irene,
Centurion, 0157 South Africa,
Tel: (+27)12 345 6694, Fax: (+27)12 345 6813,
E-mail: info@phunga.co.za,
Web: www.phunga.co.za

Project Title:
Construciton of BioPark Phase 1C
Extension to Phase with a Second Floor and Lift

Scale on reduced Drawing
100mm on Original Drawing

Drawing Title: Upstand Beams Reinforcing Layouts and Bending Schedule PHG-STR-105	**Designed by:** Koketso Moyaba; Civil & Structural Engineer
Date November 2017	**Drawn by:** Koketso Moyaba; Civil & Structural Engineer
Scale NTS	**Checked by:** TS Wanakwanyi; PrEng